Typical Configuration

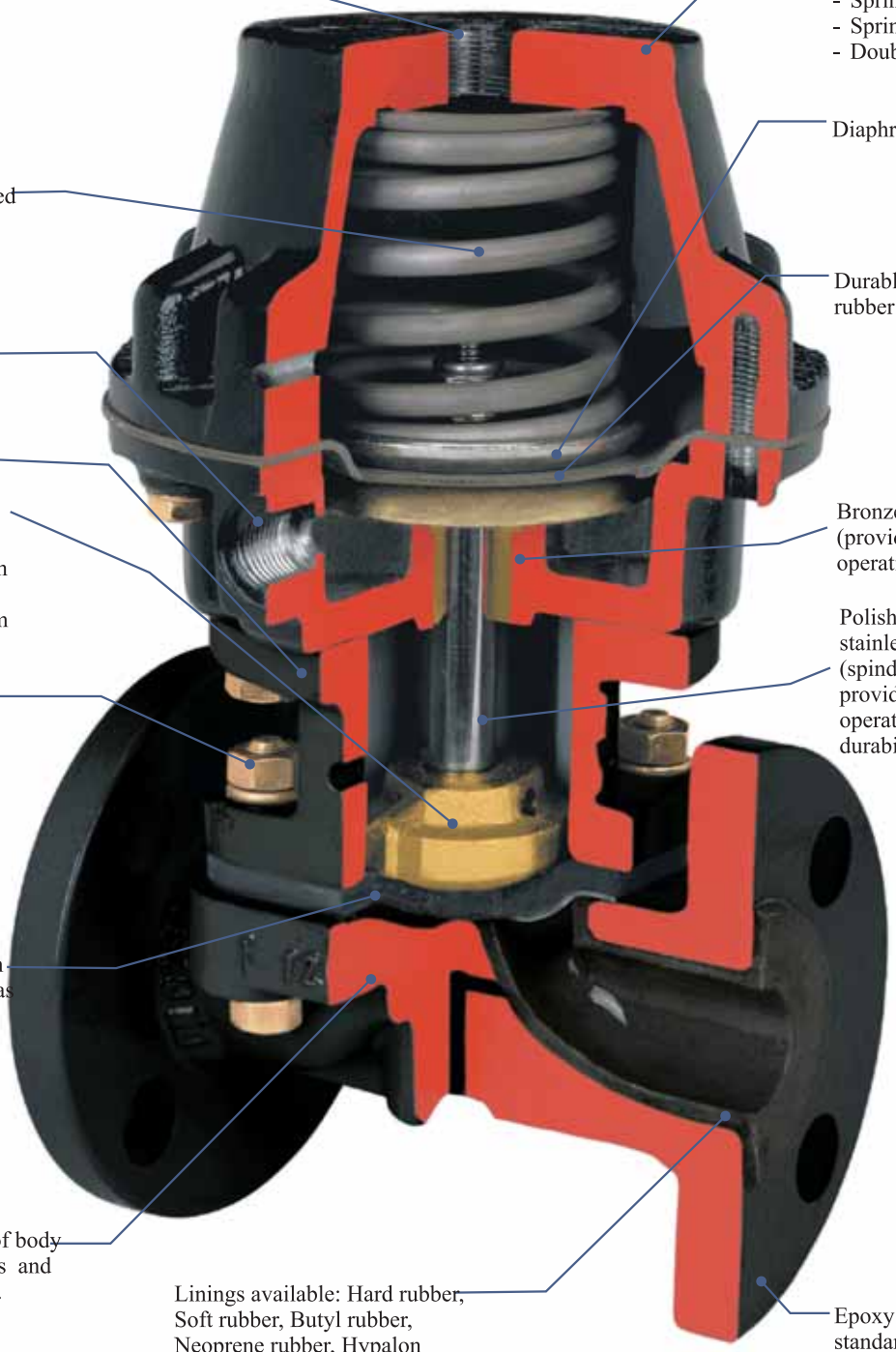

Modular accessory

Available in 3 modes:
- Spring to Close
- Spring to Open
- Double Acting

Diaphragm plate.

Corrosion-resistant plated springs.

Durable neoprene rubber air diaphragm

1/4" NPT connection

Ductile iron distance piece.

Unique compressor design eliminates point loading on the diaphragm stud while fully supporting the diaphragm as the valve strokes

Bronze bushing (provides smooth operation).

Polished 410 stainless steel stem (spindle) that provides smooth operation and durability.

Plated or stainless hardware supplied as standard depending on body liner selection. Special bolting on request.

Diaphragm - available in various Teflon versions as well as numerous elastomer grades. Provides bubble-tight closure and seal.

Wide selection of body materials, linings and end connections.

Linings available: Hard rubber, Soft rubber, Butyl rubber, Neoprene rubber, Hypalon rubber, Halar coated, Polypropylene, PVDF, Tefzel and PFA. (Specials on request)

Epoxy paint as standard (special finishes on request).